由 Autodesk 教育版产品制作

REVISION LIST							
ITEM	ECN NO.	POSITION	DESCRIPTION WAS	DESCRIPTION IS	DATE	UPDATED BY	APPROVED BY

FIRST USED ON 200V4Q

Revision

Version A

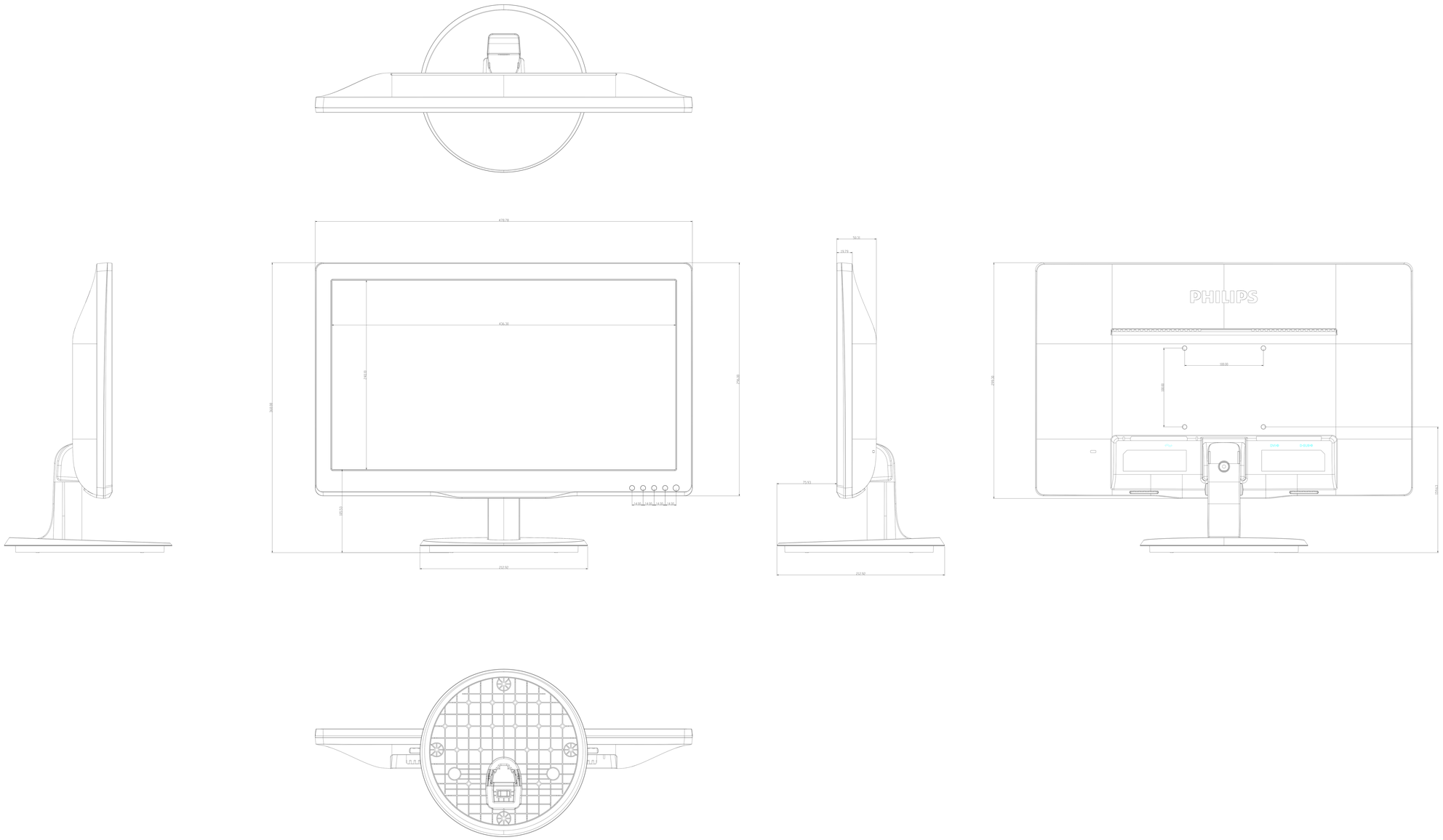

TOLERANCE UNLESS OTHERWISE SPECIFIED (mm)			
RANGE OF DIM.	METAL & PLASTIC	POLYFOAM	CARTON
0~30	±0.15	+0/-2.0	+2.0/-0
30~60	±0.15		
60~120	±0.20		
120~300	±0.25		
300~600	±0.30		
600~1200	±0.40	+0/-3.0	
1200~UPON	±0.50	+0/-4.0	
ANGLE (SHEET METAL)		±0.5°	
Internal Diameter of Plastic Screw Boss		±0.05	

MODEL:		PROE 3D:	PROE 2D:
UNIT mm	TOLERANCES UNLESS OTHERWISE STATED DIMENTIONS ANGLE	MATERIAL	
SCALE	3/4 REDU.	TREATMENT	
DRAWN zhisheng.pan	DATE		
CHECK daniely.chen	DATE		

TPV Technology Ltd.

20_PRT_A0_Ver001

110	-1	A0
TP	MNT	

RoHS

由 Autodesk 教育版产品制作