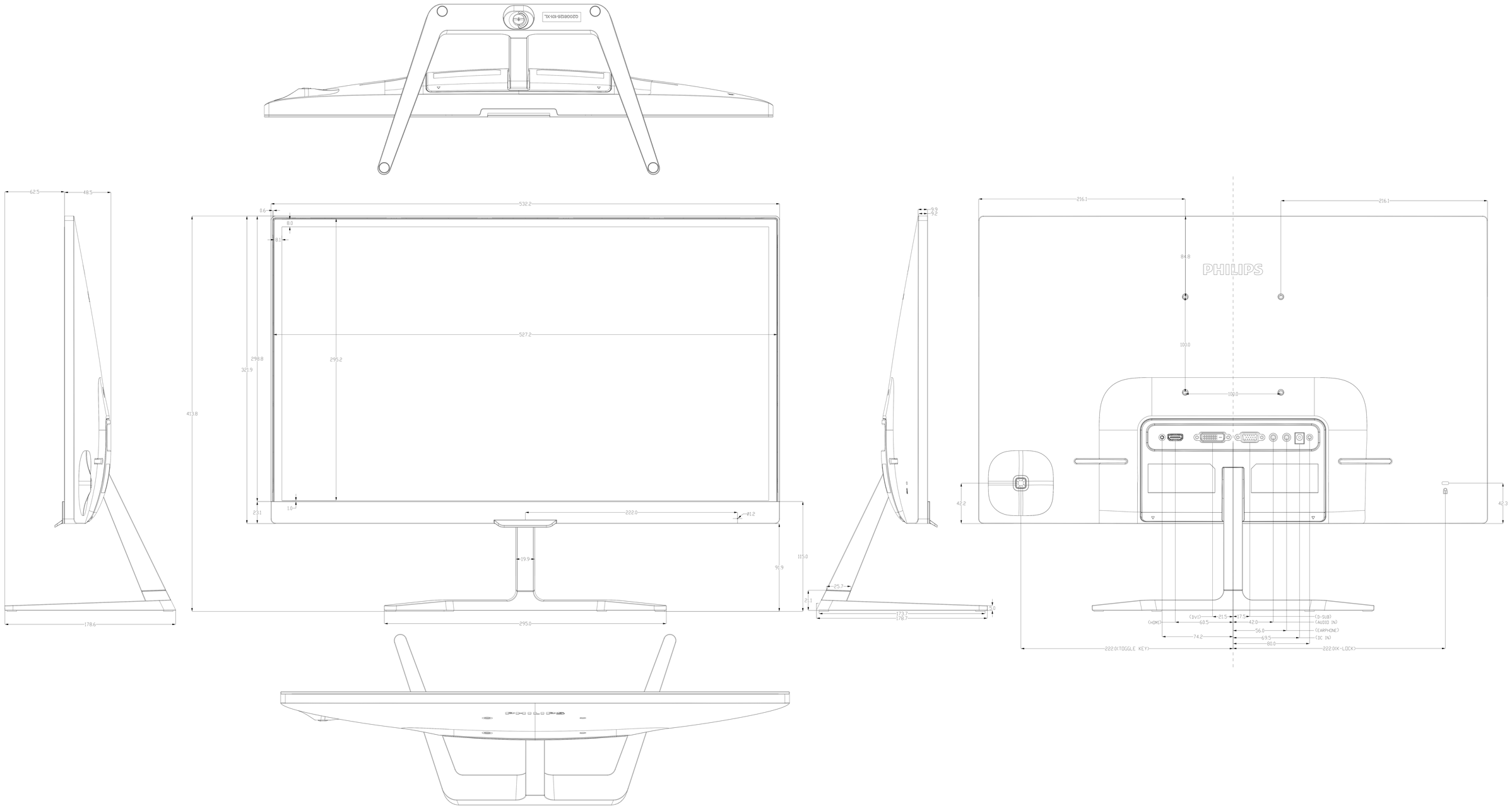

MODEL:236E7EDA-SHEET 191									
		236E7EDA							
NAME: Zhisheng.Xie			SUPERS						
TY			CHECK	DATE:2016-08-16	PHILIPS ELECTRONICS INDUSTRIES (TAIWAN) CO.,LTD.				