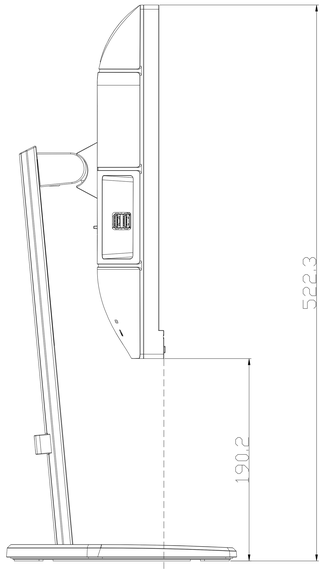

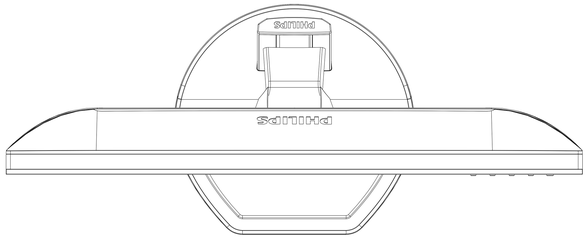

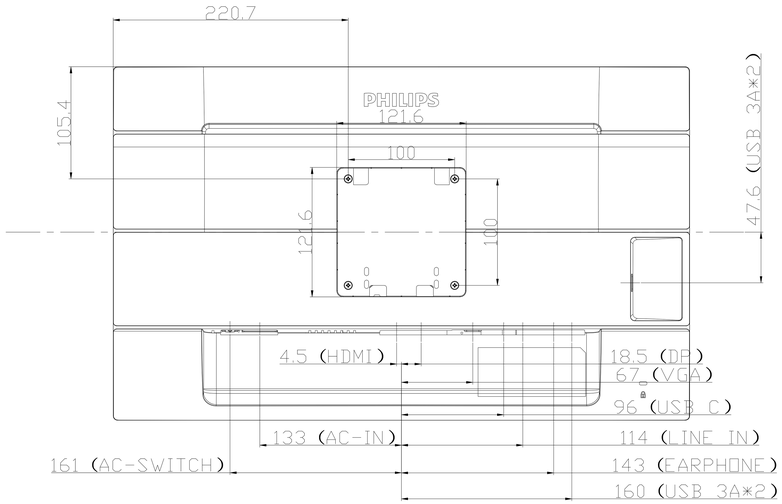

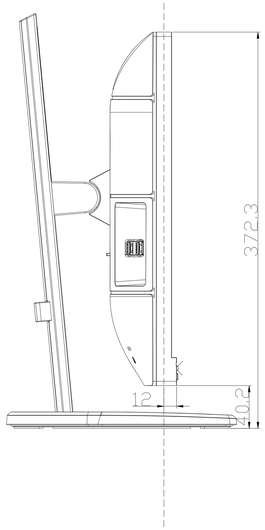

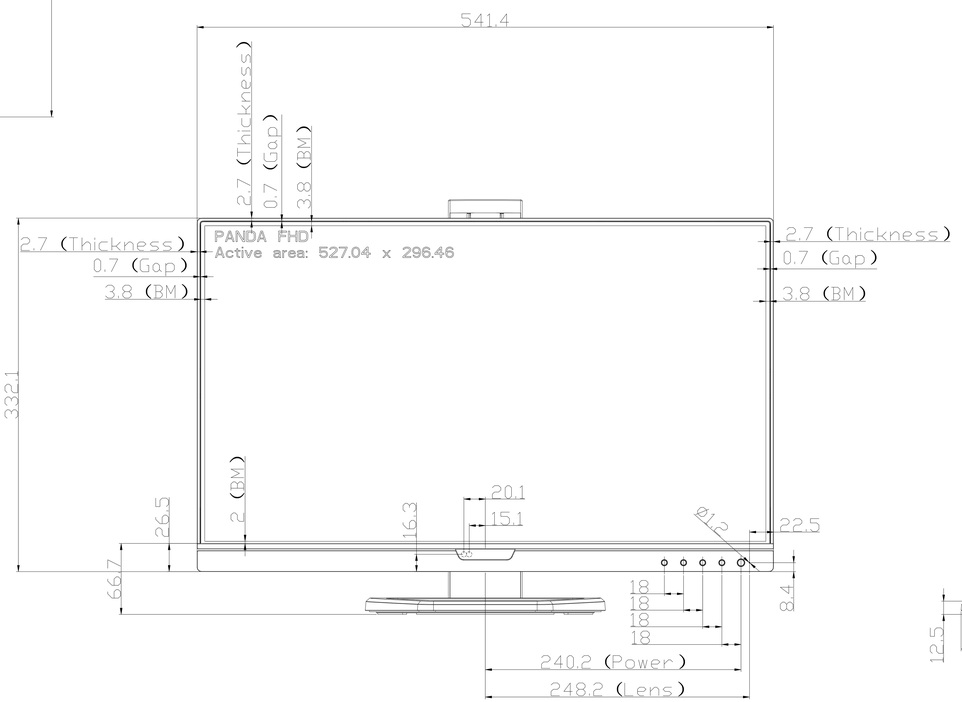

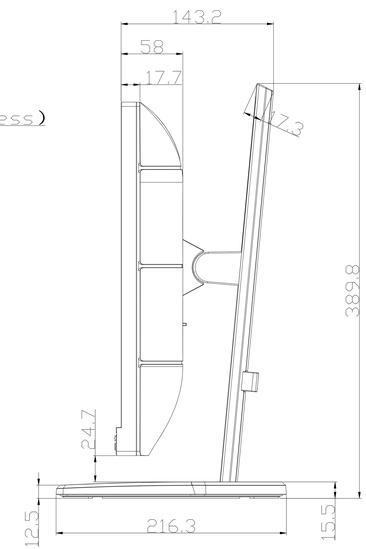

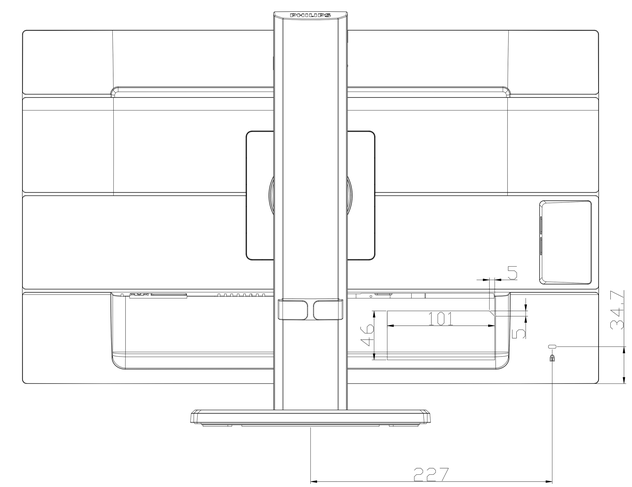

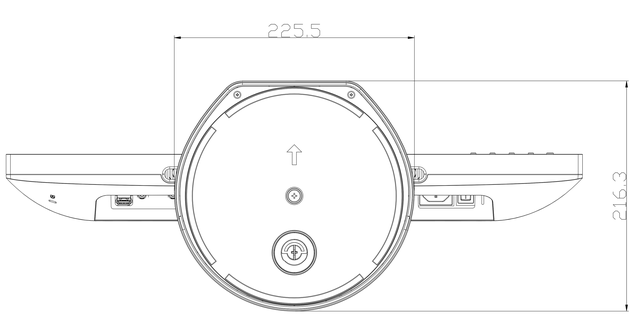

MODEL : 243B9		DRAWING :	
243B9 SHT191			01UPDATE MODEL NAME
NAME Dillon.Chen	SUPERS .		
TY	CHECK	DATE 2019-06-18	© PHILIPS ELECTRONICS INDUSTRIES (TAIWAN) CO., LTD.