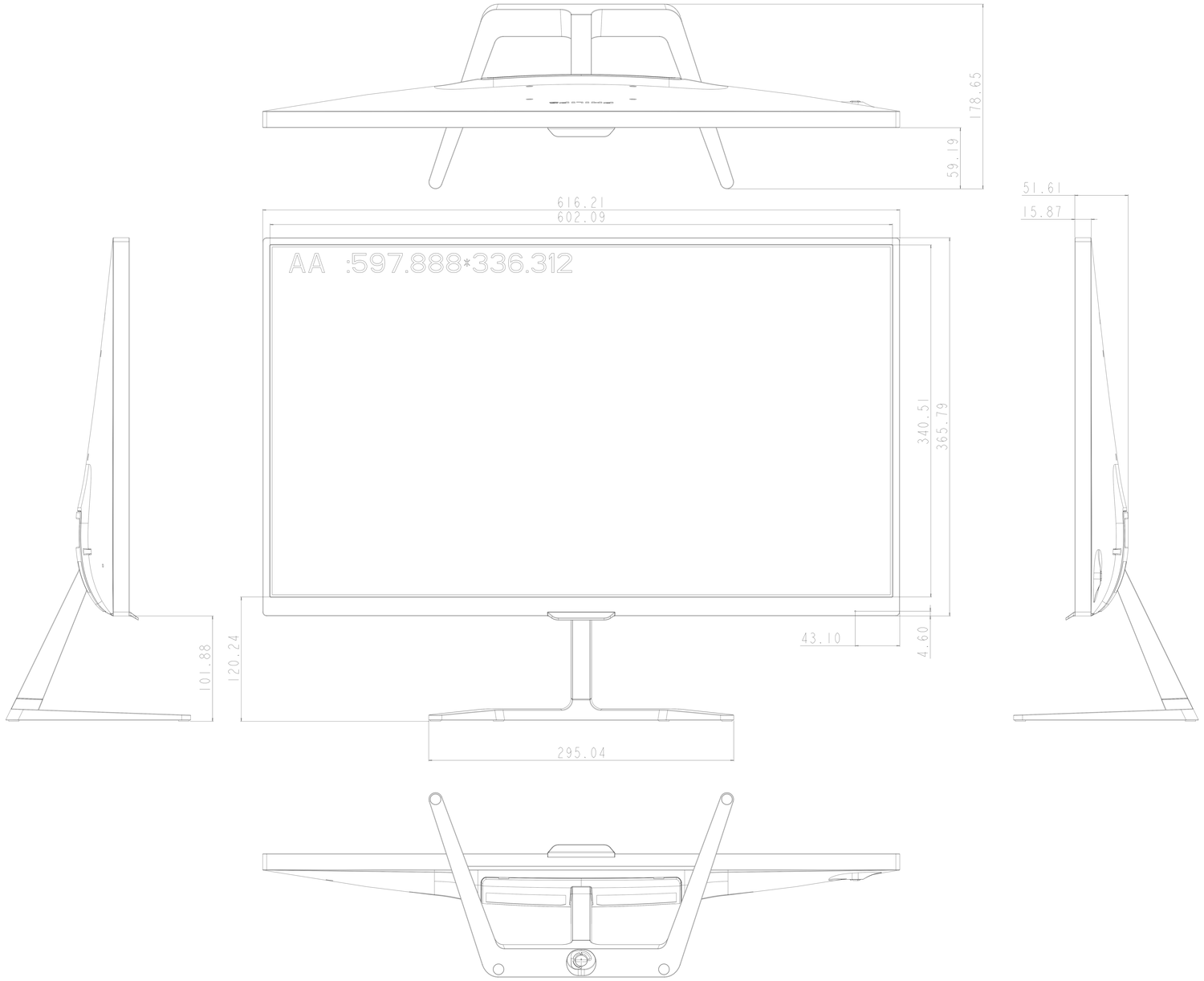

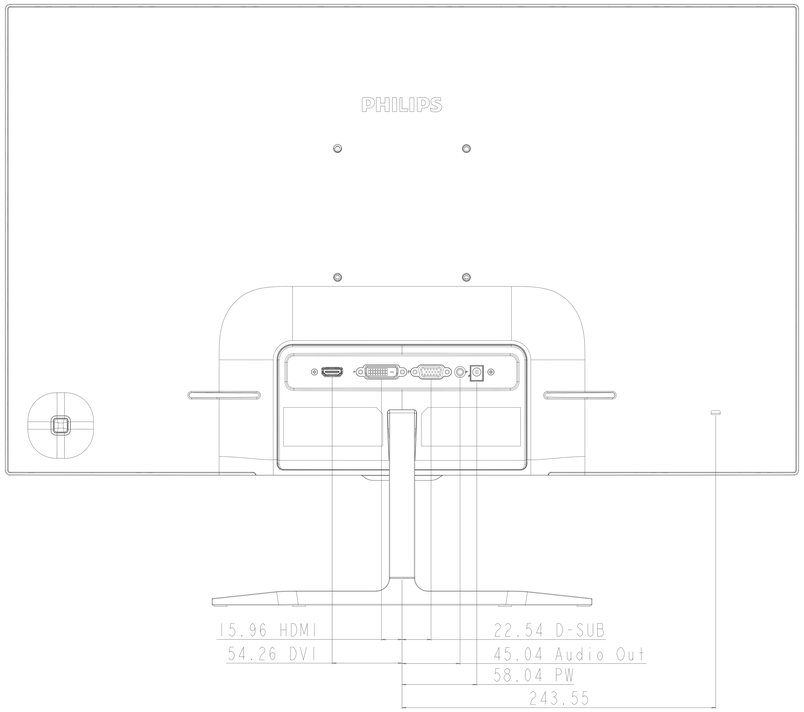

SHT191
Model: 276E7QD
ME: Alex Tsai
Date: 141204