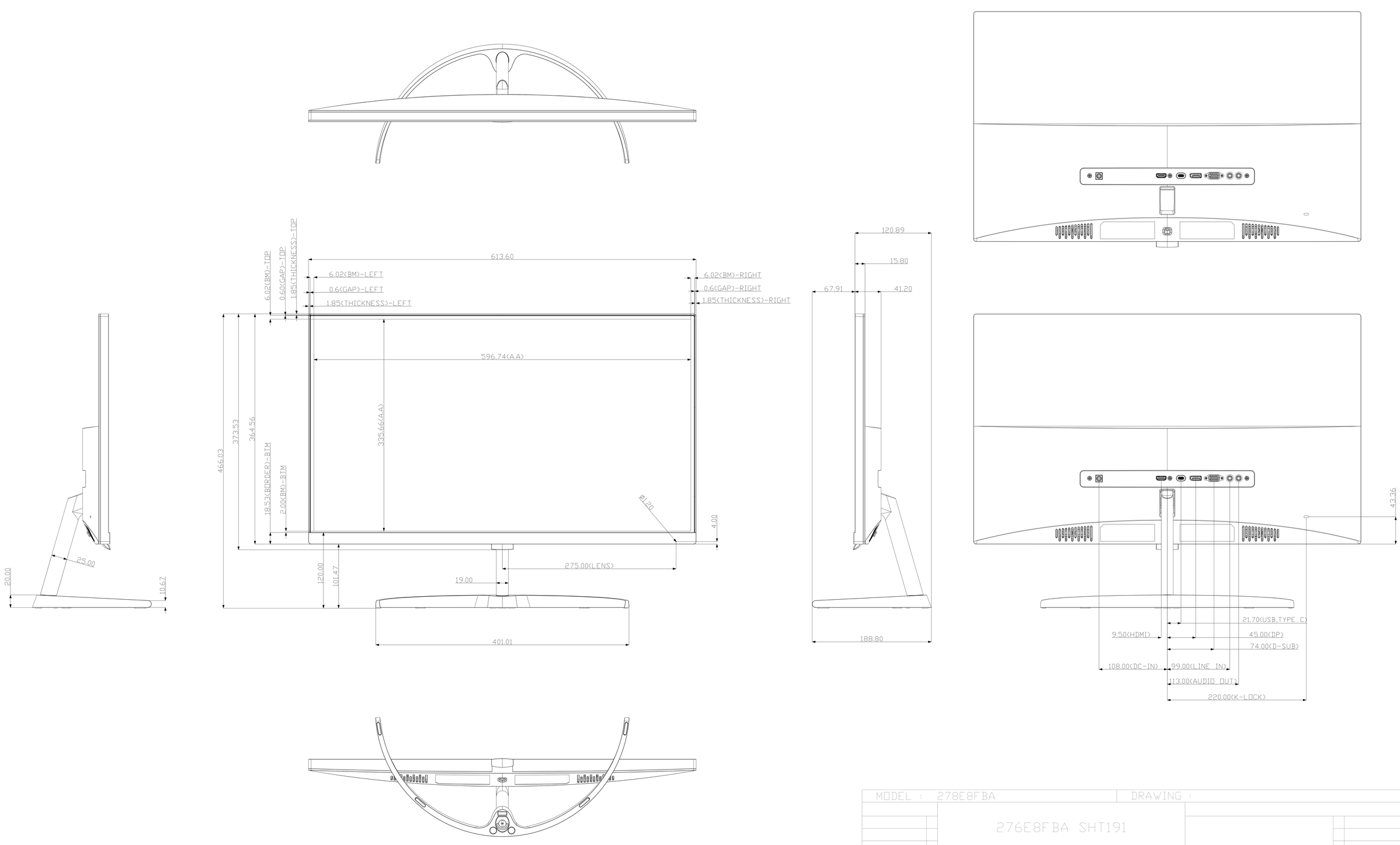

MODEL : 278E8FBA		DRAWING :	
276E8FBA SHT191			
NAME Neil.Huang	SUPERS .		
TY	CHECK	DATE	© PHILIPS ELECTRONICS INDUSTRIES (TAIWAN) CO., LTD.

2016-05-09