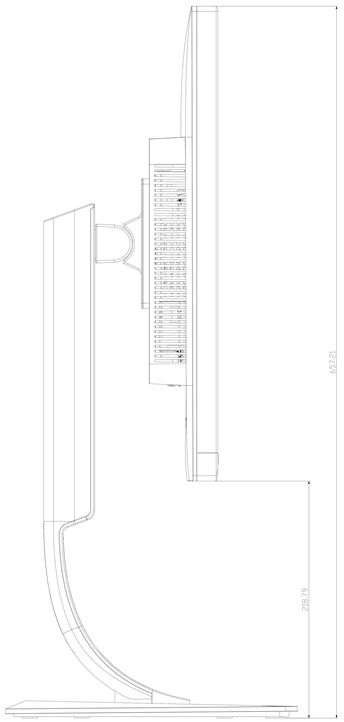
637.21
218.73

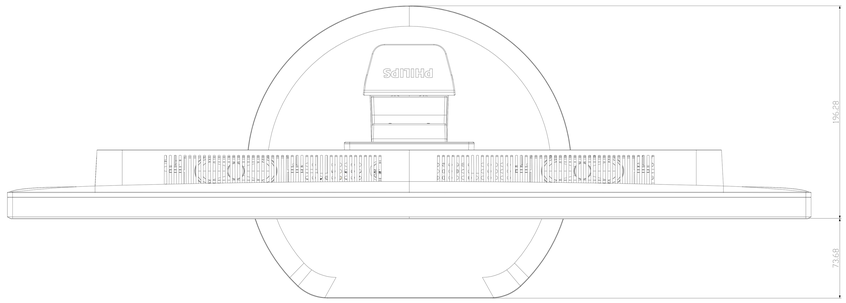
PHILIPS
156.28
73.68

741.88
18.76
21.04
21.04
698.11(AA)
392.65(AA)
438.42
477.21
4.50
29.26
64.05
1.51
16.00
16.00
16.00
16.00
41.44

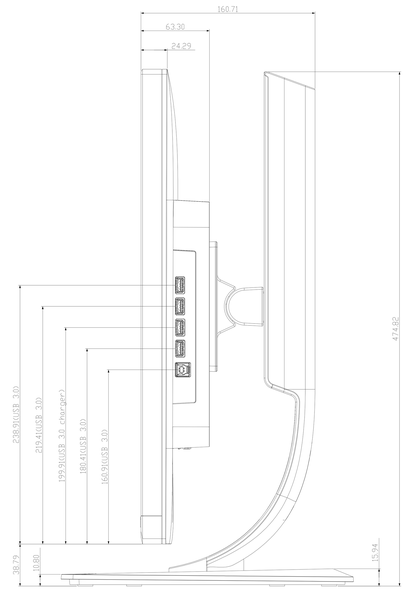
160.71
63.30
24.29
238.31(USB 3.0)
213.41(USB 3.0)
199.91(USB 3.0 charger)
188.41(USB 3.0)
160.91(USB 3.0)
474.82
38.73
10.80
15.94

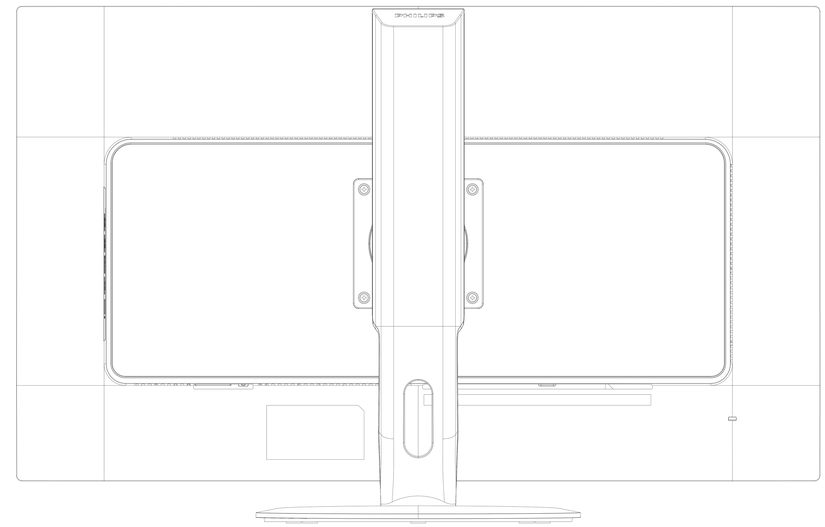

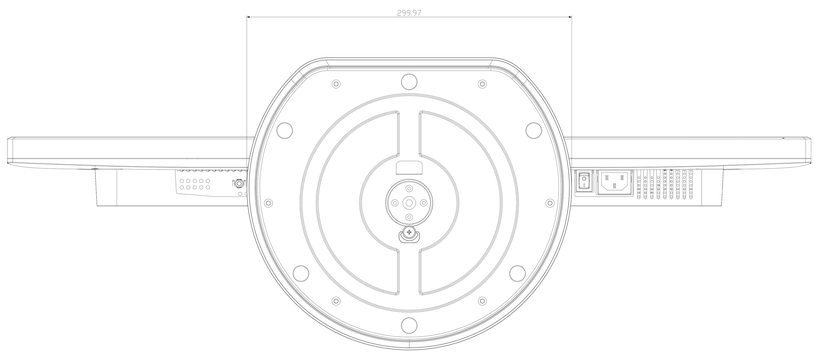
299.97

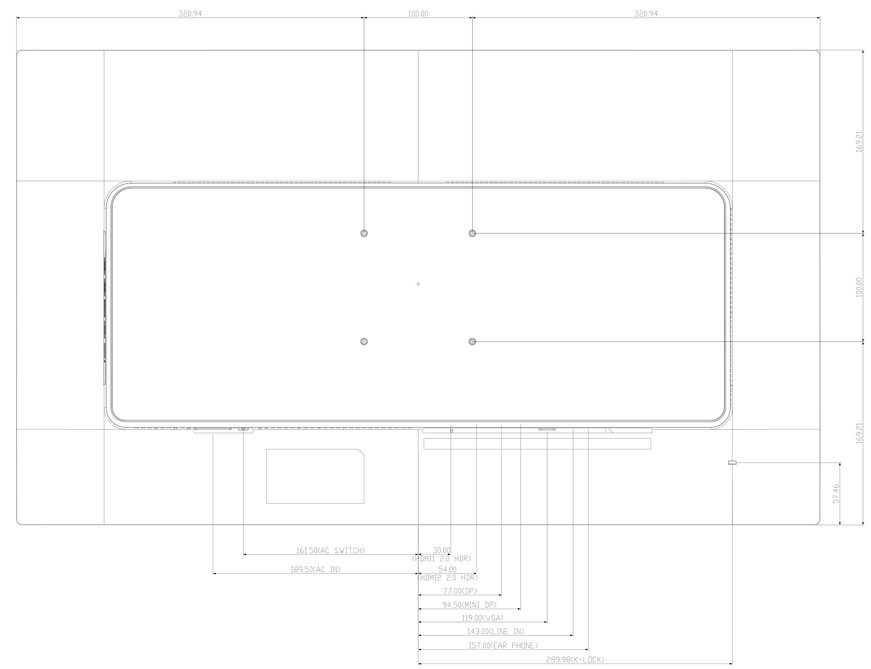
320.94
100.00
320.94
169.21
100.00
169.21
57.46
161.50(AC SWITCH)
189.50(AC IN)
30.00
(HDMI1 2.0 HDR)
54.00
(HDMI2 2.0 HDR)
77.00(DP)
94.50(MINI DP)
119.00(VGA)
143.00(LINE IN)
157.00(EAR PHONE)
289.98(K-LOCK)