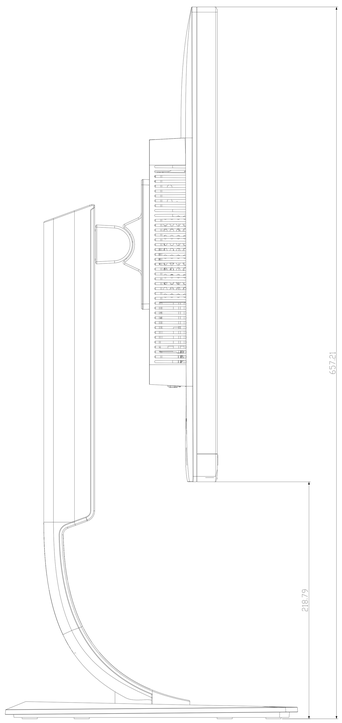
637.21
218.79

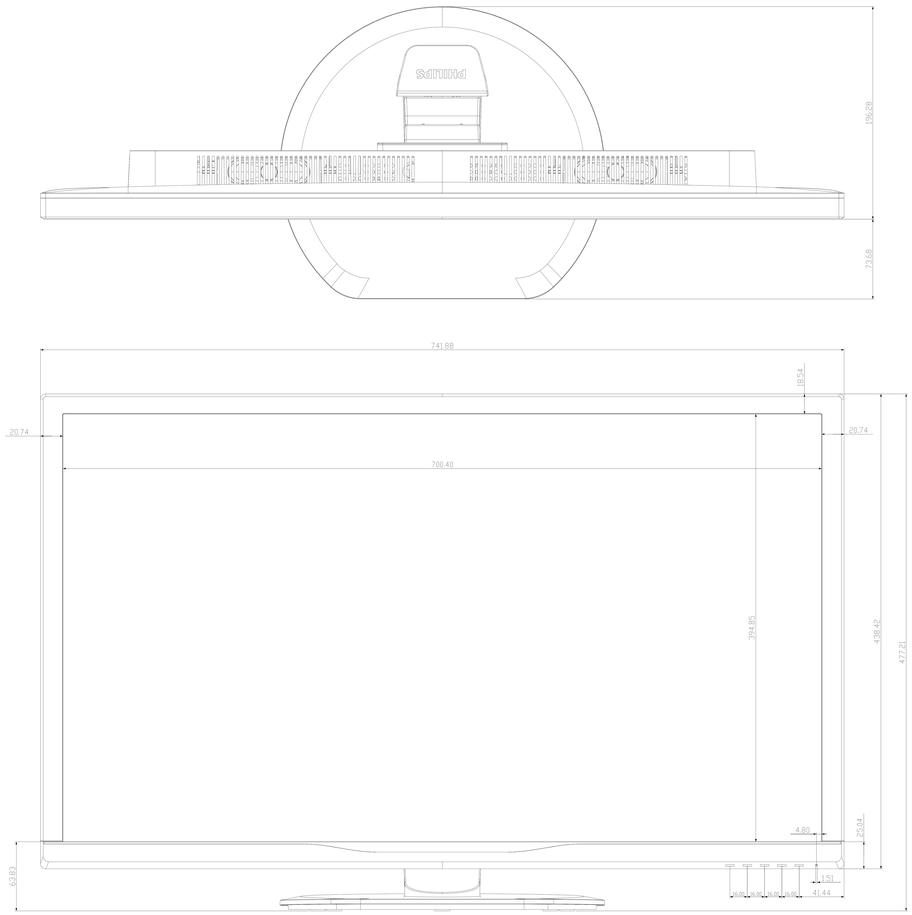
PHILIPS
156.28
73.68
741.88
18.54
20.74
20.74
700.40
394.85
438.42
477.21
4.80
25.04
63.83
1.51
16.00
16.00
16.00
16.00
41.44

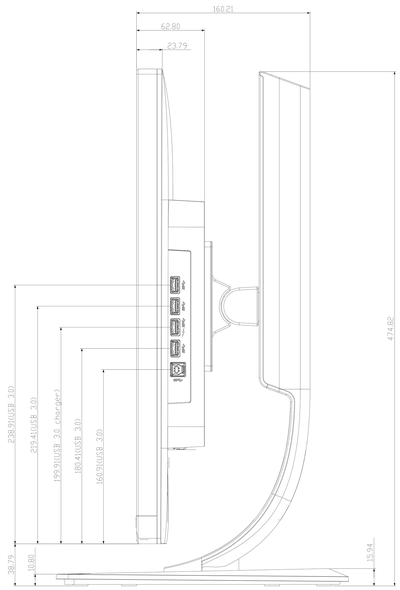
160.21
62.80
23.79
238.91(USB 3.0)
213.41(USB 3.0)
199.91(USB 3.0 charger)
185.41(USB 3.0)
160.91(USB 3.0)
38.79
10.80
474.82
15.94

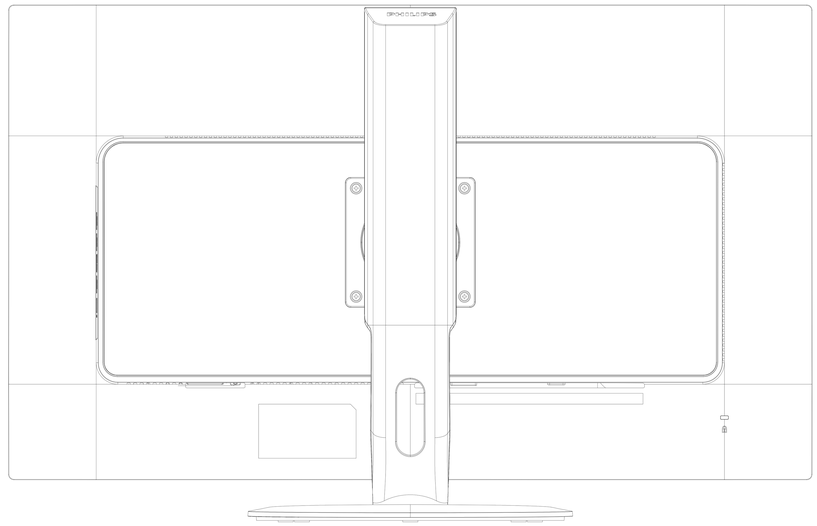

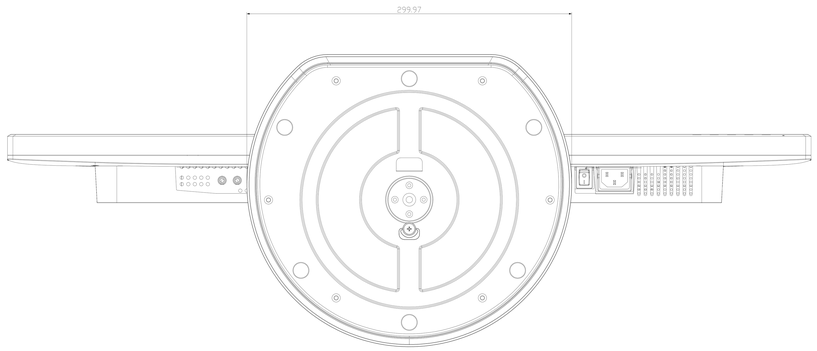
299.97

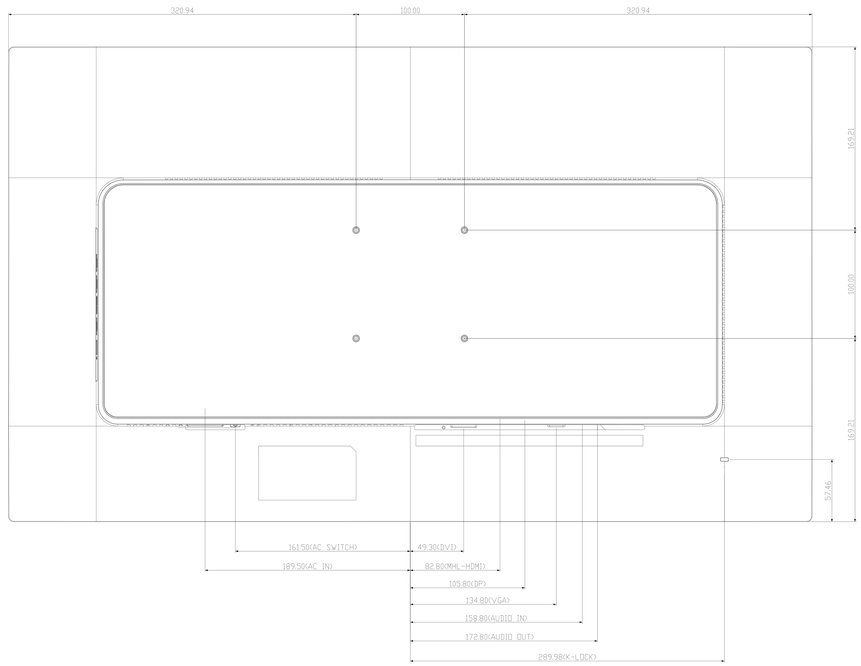
320.94
100.00
320.94
169.21
100.00
169.21
57.46
161.50(AC SWITCH)
49.30(DVI)
189.50(AC IN)
82.80(MHL-HDMI)
105.80(DP)
134.80(VGA)
158.80(AUDIO IN)
172.80(AUDIO OUT)
289.98(K-LOCK)