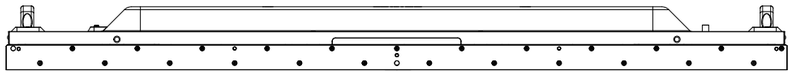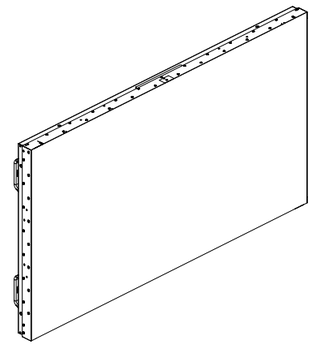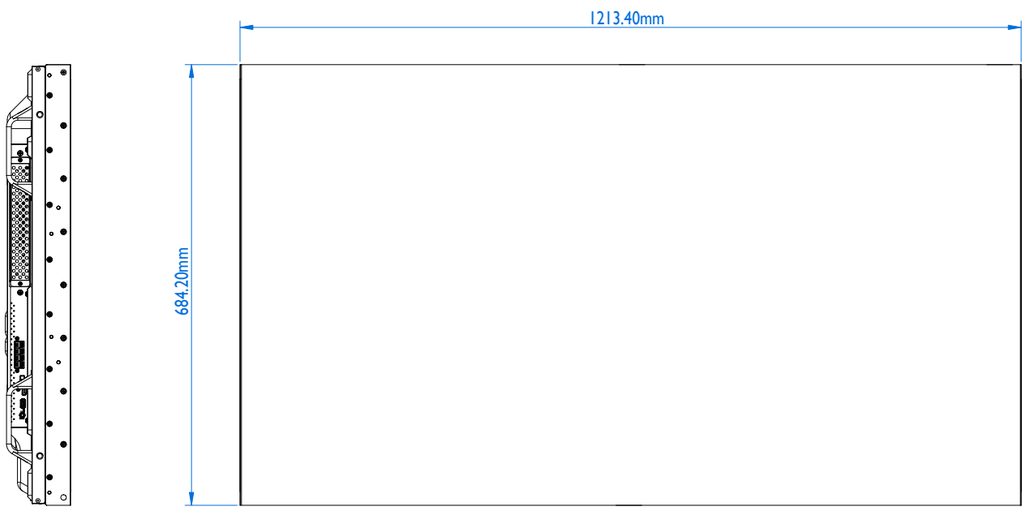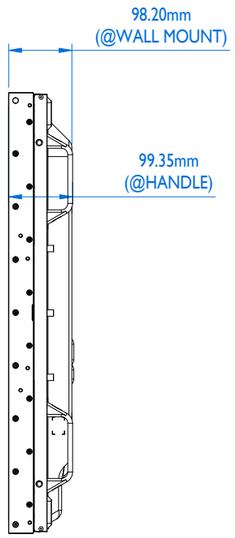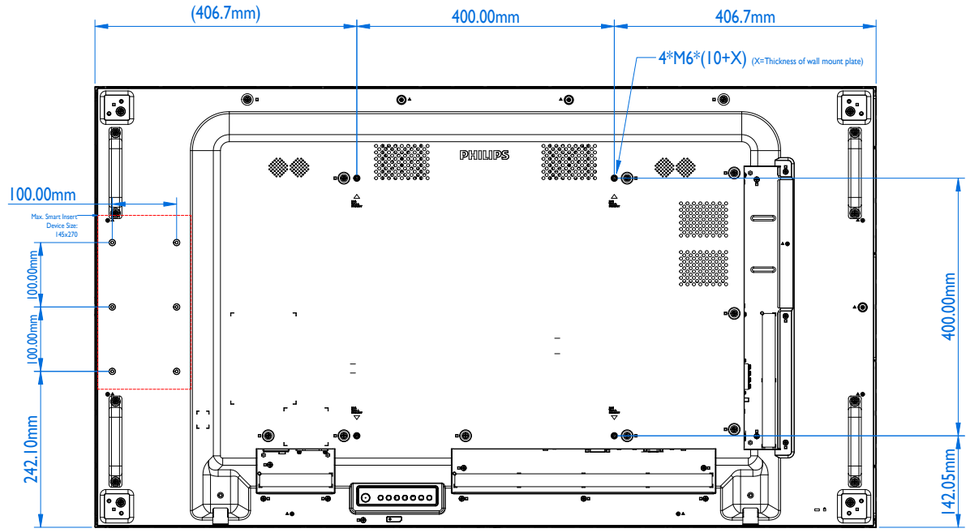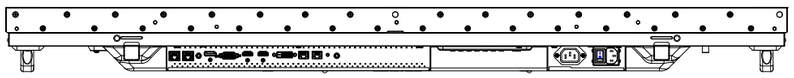Philips 55BDL3207X
Version: 1.0
Release Date: 2022/05/05